Introduction:

S15/S17 series are based on piezoresistive silicon pressure sensors packaged in a 316L stainless steel housing. The sensing package utilizes silicon oil to transfer pressure from the 316L diaphragm to the sensing element.

This 24 bits digital output pressure sensor supports I^2C interface protocols, and also the voltage output of 0.5-4.5V,1-5V are optional.

Each sensor was strictly temperature compensated for both zero and span.

To meet the various application requirements,we also provided the thread welded options(S17 series)

Features:

- Low cost OEM
- Pressure Range: 0-100kPa…7MPa
- Wide operable temperature range -40-125℃
- Compact profile, designed for welding
- Reverse polarity protection

Applications:

- Process control
- Fresh and waste water measurements
- Medical instruments
- Pressure transmitters

Performance Specifications

I^2C

Ambient Temperature: 25° C (unless otherwise specified)

Parameters	Min.	Typical	Max.	Notes
Power supply(V)	3	3.3	5.5	3.3V as default; 5V optional
Current consumption	1μA		2.5mA	
Interface Type	I^2C (Address: 0XFE)			
Output Type	10% - 90%			5%-95% Optional
Zero Pressure Output		838861		Count Hex
Full Scale Pressure Output(FS)		7549746		
Accuracy of pressure output (%FS)	-0.1	±0.05	0.1	combined linearity, hysteresis and repeatability.
Total Error Band (%FS) [2]	-0.75	±0.5	0.75	includes calibration errors and temp. effects over the compensated range.
Temp. Accuracy(℃)	-2.5		2.5	over the compensated temp. range
Operation temp. (℃)	-40		125	
Compensation temp. (℃)[1]	-10		70	
Storage temp. (℃)	-40		125	
Insulation Resistance (MΩ/250V)	50			
Response Frequency (HZ)		100HZ	200HZ	
Over pressure	2 times or 10MPa whichever is less			

Voltage output

Parameters	Min.	Typical	Max.
Accuracy(%FS) combined linearity, hysteresis and repeatability		±0.05	±0.1
Output	0.5-4.5V(Ratiometric); 1-5V		
Zero output(%FS)	-0.5	±0.25	0.5
Full Scale output(%FS)	-0.5	±0.25	0.5
Temp. characters			
Operation Temp.(℃)	-40		125
Compensation Temp.(℃)[1]	-10		70
Total error band(%FS)[2]	-0.75	±0.5	0.75
Power supply	See ordering information		
Insulation Resistance (MΩ/250V)	50		
Over pressure	2 times or 10MPa whichever is less		

1. Compensation temp. -20~85℃ optional

2. Total error band: total output error including Zero, Span,non-linearity,temp.erorr within compensated temperature range.

Dimmensions(mm):

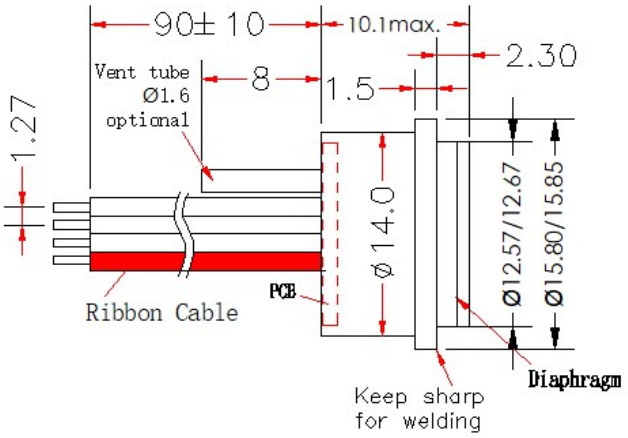

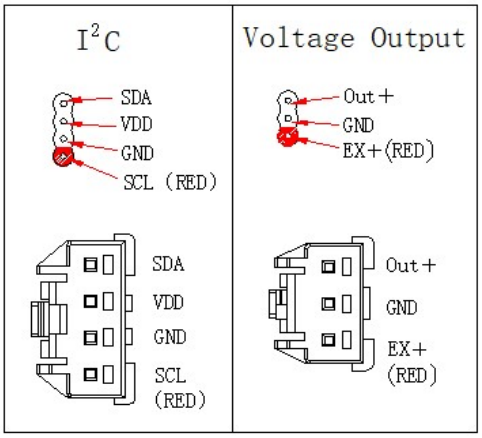

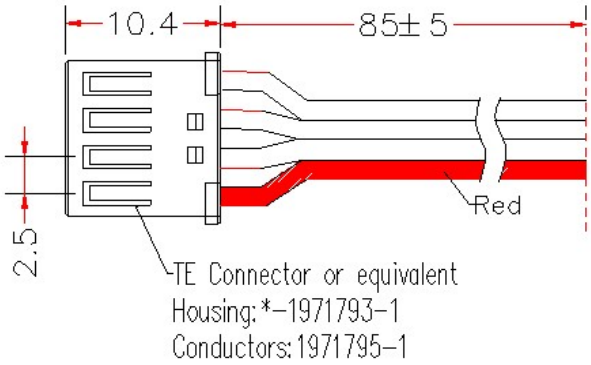

Thread dimensions of S17 (mm)

1/4NPT (Code 1)

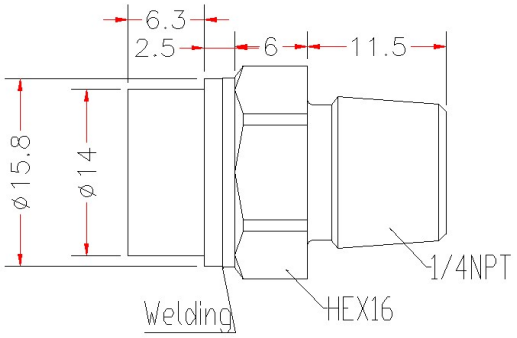

G1/4 (Code 2)

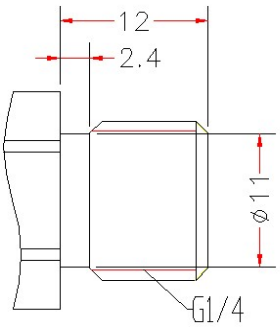

1/8NPT (Code 3)

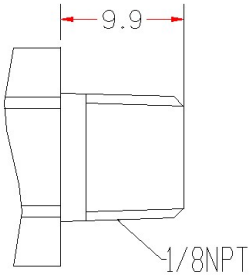

G1/8 (Code 4)

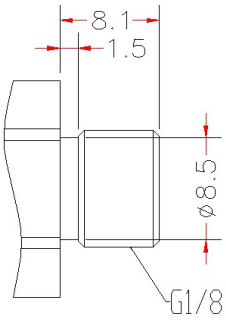

Ordering informations

Model	Description
S15	Ø15.8mm sensor capsule
S17	Sensor with thread welded

Code	Power supply	Output
D	3.3V	I^2C
B	5V	0.5-4.5V(Ratiometric)
H	8-30V	1-5V

Code	Pressure range	Gauge	Absolute
100k	0-100kPa	*	*
200k	0-200kPa	*	*
400k	0-400kPa	*	*
600k	0-600kPa	*	*
1M	0-1MPa	*	*
1.6M	0-1.6MPa	*	*
2.5M	0-2.5MPa	*	*
4M	0-4MPa	*	*
7MPa	0-7MPa	*	*
XX	Special range		

Code	Pressure Reference
G	Absolute Pressure
A	Vent Gauge Pressure(W/O vent tube as default)
S	Sealed Gage

Code	Wiring
1	TE Connector
2	Ribbon cable 90mm
X	Special

Code	Thread (Only S17 series)
1	1/4NPT
2	G1/4
3	1/8NPT
4	G1/8
X	Special

Example:

S17	D	600k	G	2	1	
	I^2C	0-600kPa	Vent Gauge	Ribbon cable	1/4NPT	Model no.: S17D-600kG-21

Remark:
1. If need negtive pressure sensor, Pls. contact us
2. For S15 series, We can also provide the option of flat diaphragm (without welding ring)